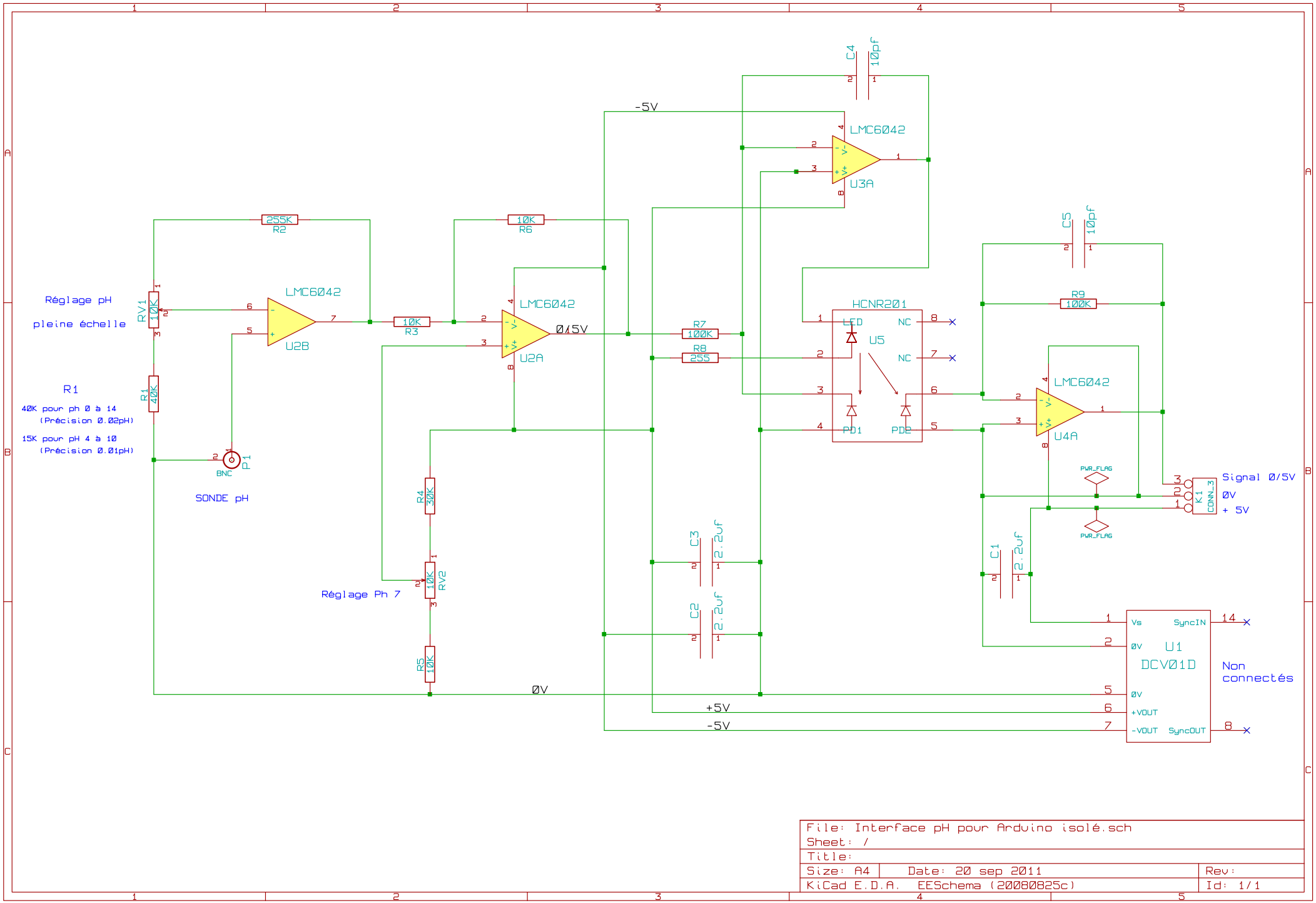

File: Interface pH pour Arduino isolé.sch		
Sheet: /		
Title:		
Size: A4	Date: 20 sep 2011	Rev:
KiCad E.D.A. EESchema (20080825c)		Id: 1/1